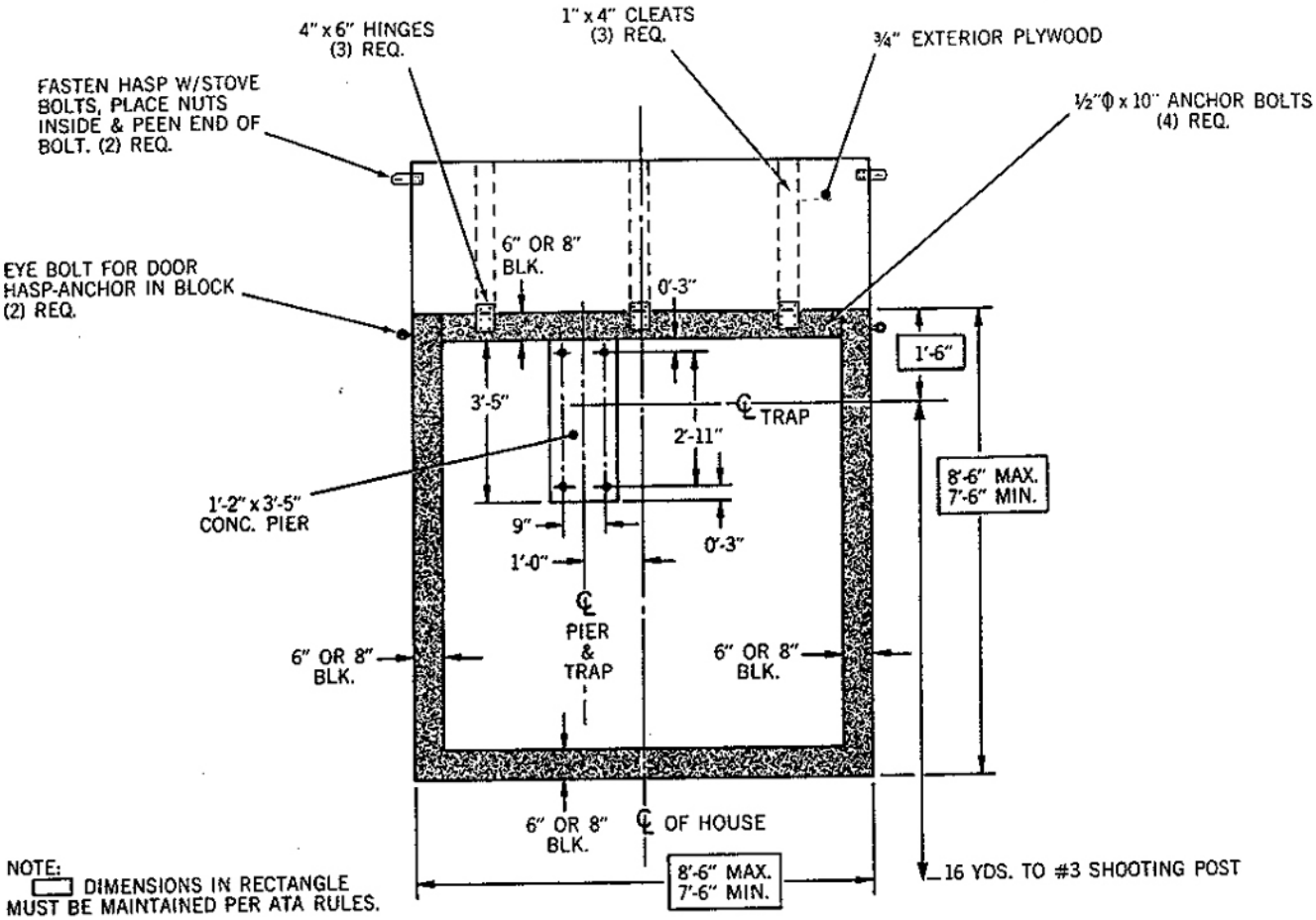
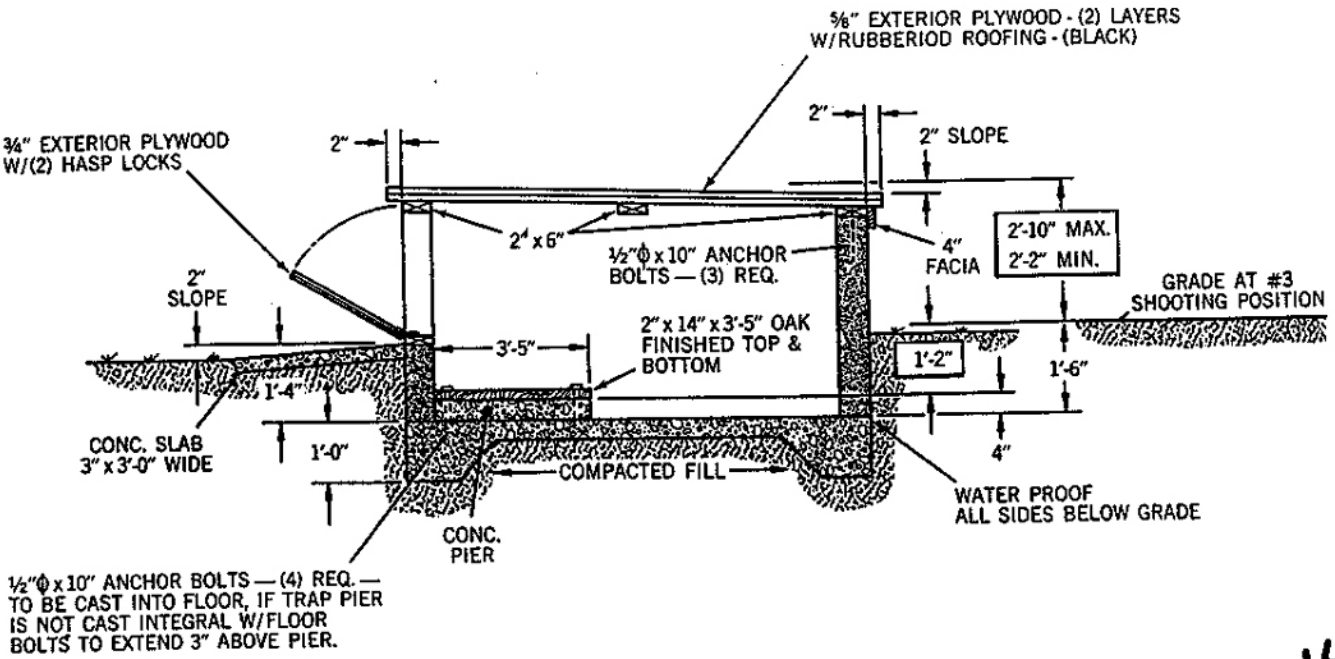
TRAP HOUSE – NON-PITTED